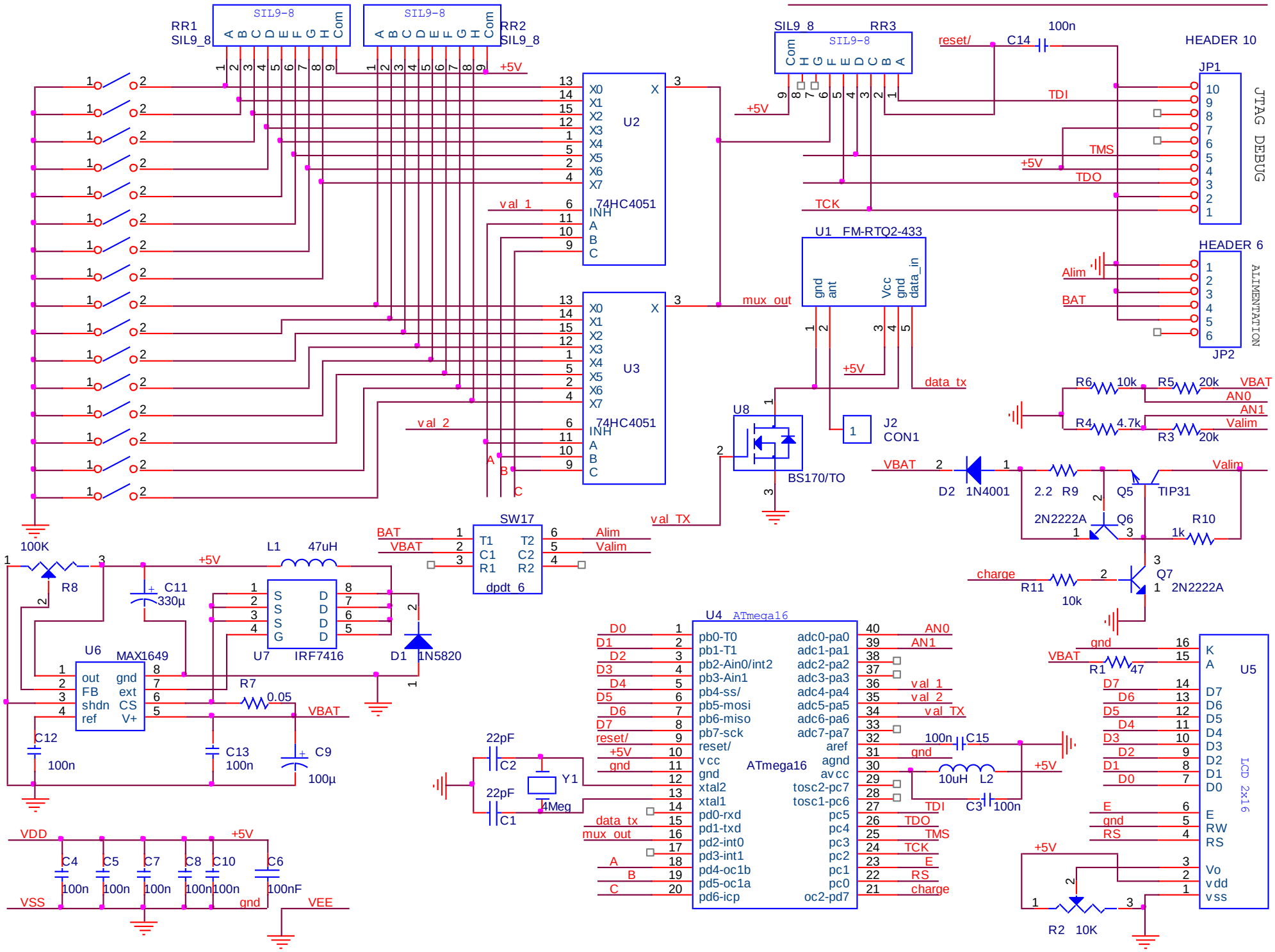

RR1
SIL9_8
SIL9-8
RR2
SIL9_8
+5V
U2
74HC4051
U3
74HC4051
val_1
val_2
mux_out
val_TX
SIL9_8
RR3
reset/
C14
100n
HEADER 10
JP1
JTAG DEBUG
TDI
TMS
TDO
TCK
U1 FM-RTQ2-433
gnd
ant
Vcc
gnd
data_in
data_tx
HEADER 6
ALIMENTATION
JP2
Alim
BAT
U8
BS170/TO
J2
CON1
R6 10k
R5 20k
VBAT
AN0
AN1
R4 4.7k
R3 20k
Valim
D2 1N4001
2.2 R9
Q5
TIP31
2N2222A
Q6
R10
1k
charge
R11
10k
Q7
2N2222A
SW17
dpdt 6
100K
R8
L1 47uH
C11
330µ
U7
IRF7416
D1 1N5820
U6
MAX1649
out
FB
shdn
ref
gnd
ext
CS
V+
R7
0.05
C12
100n
C13
100n
C9
100µ
U4 ATmega16
ATmega16
pb0-T0
pb1-T1
pb2-Ain0/int2
pb3-Ain1
pb4-ss/
pb5-mosi
pb6-miso
pb7-sck
reset/
vcc
gnd
xtal2
xtal1
pd0-rxd
pd1-txd
pd2-int0
pd3-int1
pd4-oc1b
pd5-oc1a
pd6-icp
adc0-pa0
adc1-pa1
adc2-pa2
adc3-pa3
adc4-pa4
adc5-pa5
adc6-pa6
adc7-pa7
aref
agnd
avcc
tosc2-pc7
tosc1-pc6
pc5
pc4
pc3
pc2
pc1
pc0
oc2-pd7
22pF
C2
C1
Y1
4Meg
C15
10uH
L2
C3
100n
U5
LCD 2x16
R1 47
R2 10K
VDD
VSS
VEE
C4
C5
C7
C8
C10
C6
100nF